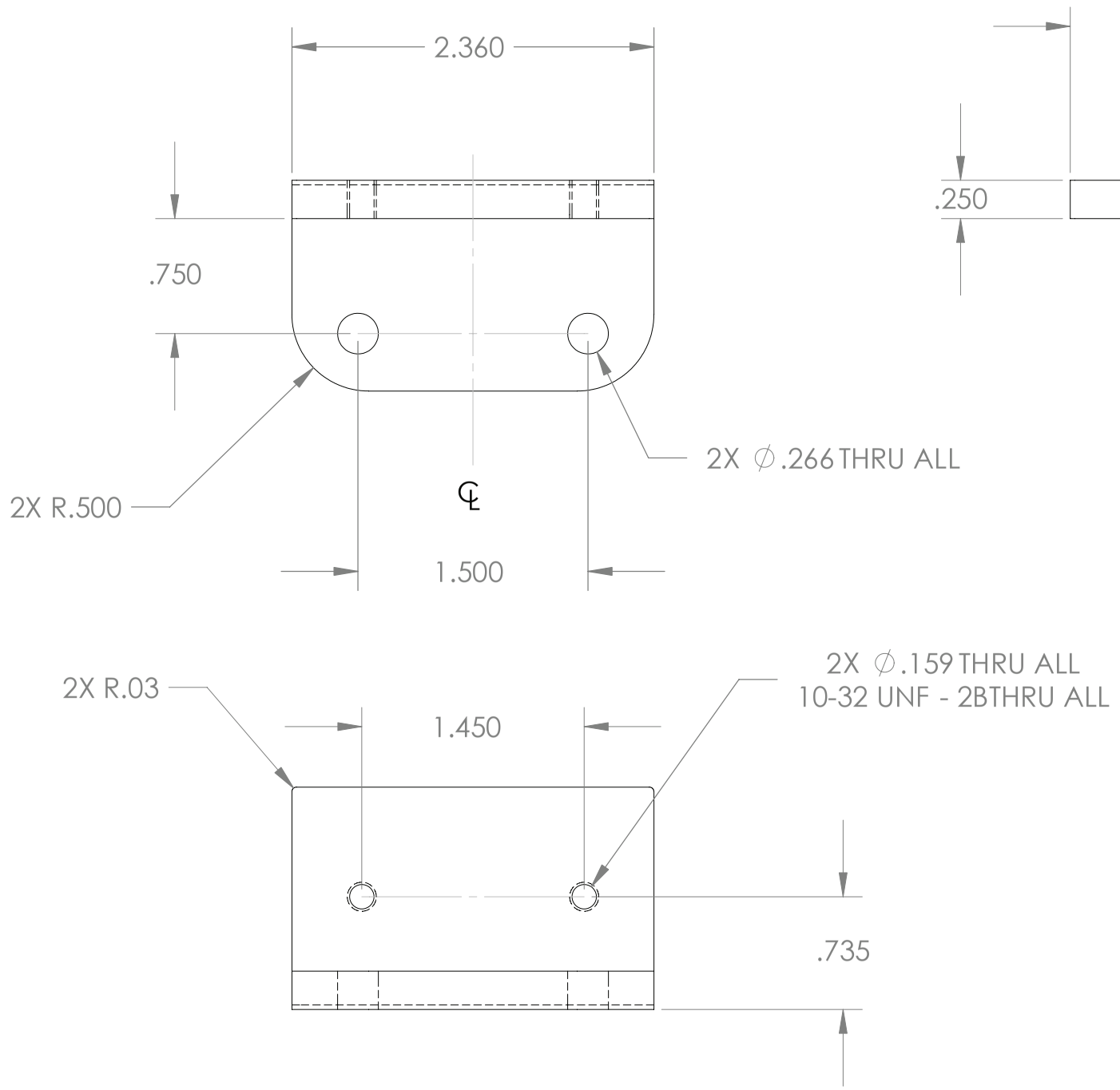

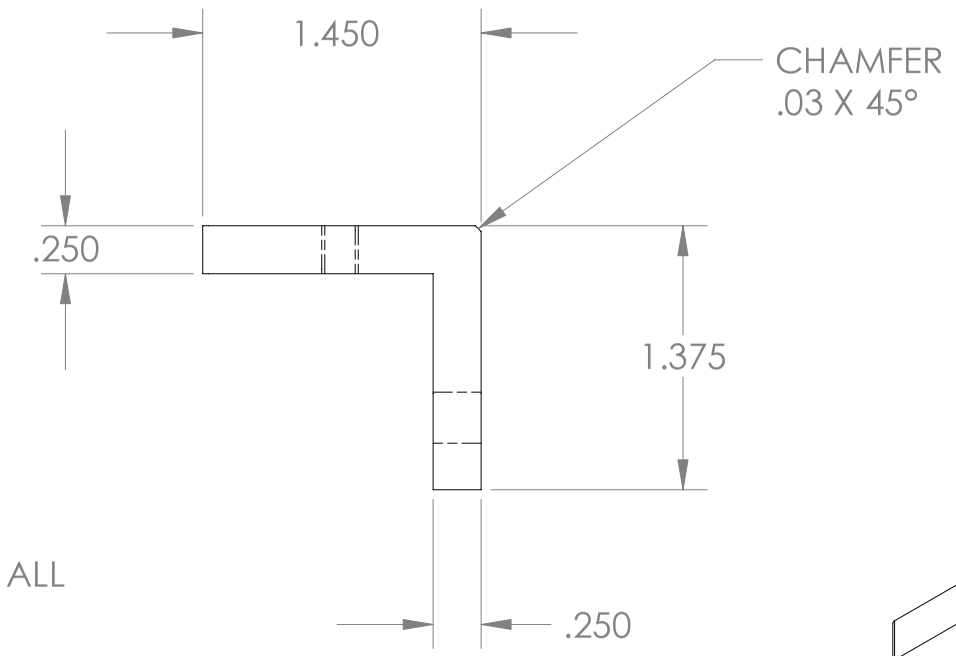

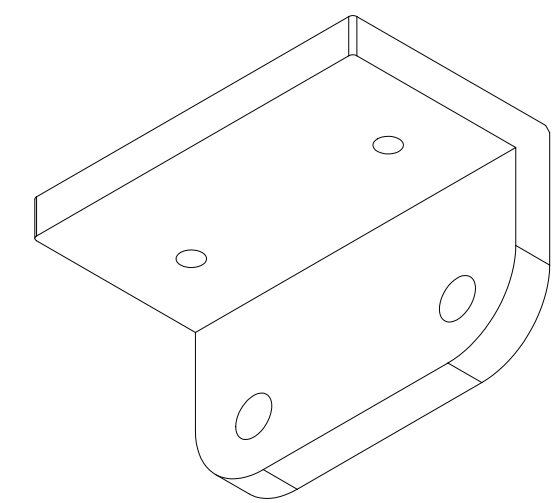

NOTES:

1. REMOVE ALL SHARP EDGES.
2. BLACK ANODIZE PER MIL-A-8625F, TYPE II, CLASS 2

PROPRIETARY AND CONFIDENTIAL
THE INFORMATION CONTAINED IN THIS DRAWING IS THE SOLE PROPERTY OF PLANEWAVE INSTRUMENTS. ANY REPRODUCTION IN PART OR AS A WHOLE WITHOUT THE WRITTEN PERMISSION OF PLANEWAVE INSTRUMENTS IS PROHIBITED.

UNLESS OTHERWISE SPECIFIED TOLERANCES

DECIMAL DIM
.XXXX ±.0005
.XXX ±.005
.XX ±.02

ANGULAR DIM
MACHINED ±0° 30'
LOCATING ±0° 30'
FORMED ±1°
CHAMFERS ±5°

SURFACE FINISH 63

MAX R 0.015

BREAK ALL SHARP EDGES & REMOVE BURRS.

	NAME	DATE
DRAWN	W. ZHOU	12/17/2007
CHECKED		
ENG APPR.		

MATERIAL
6061-T6 AL ALLOY

FINISH
SEE NOTE

PLANEWAVE Instruments

TITLE
BASE, FINDER BRKT

SIZE B | DWG. NO. 125360 | REV. A

SCALE:1:1 | CAD FILE: 125360A | SHEET 1 OF 1