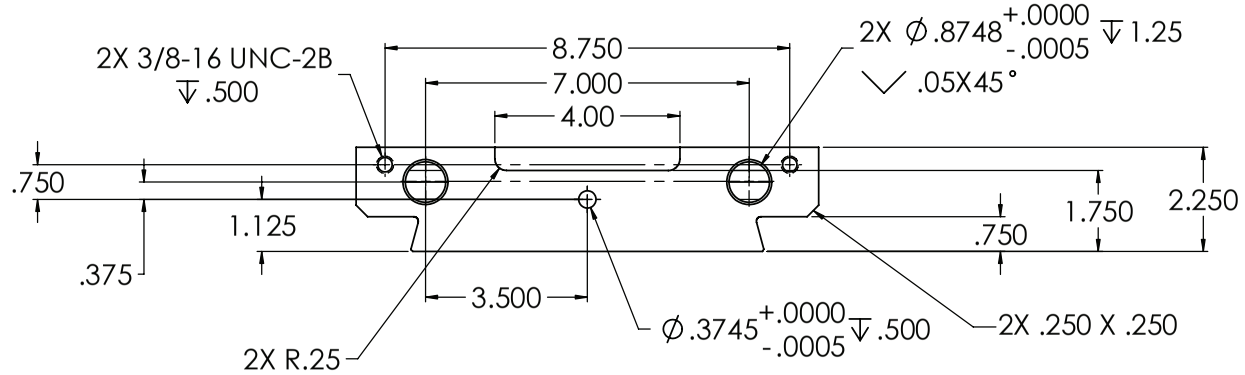

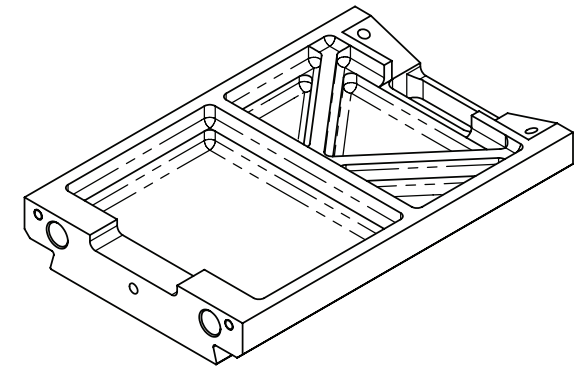

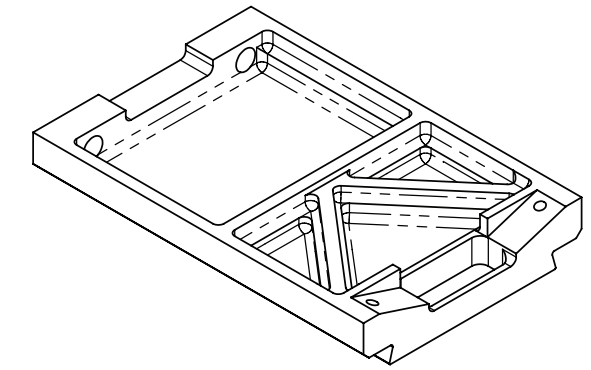

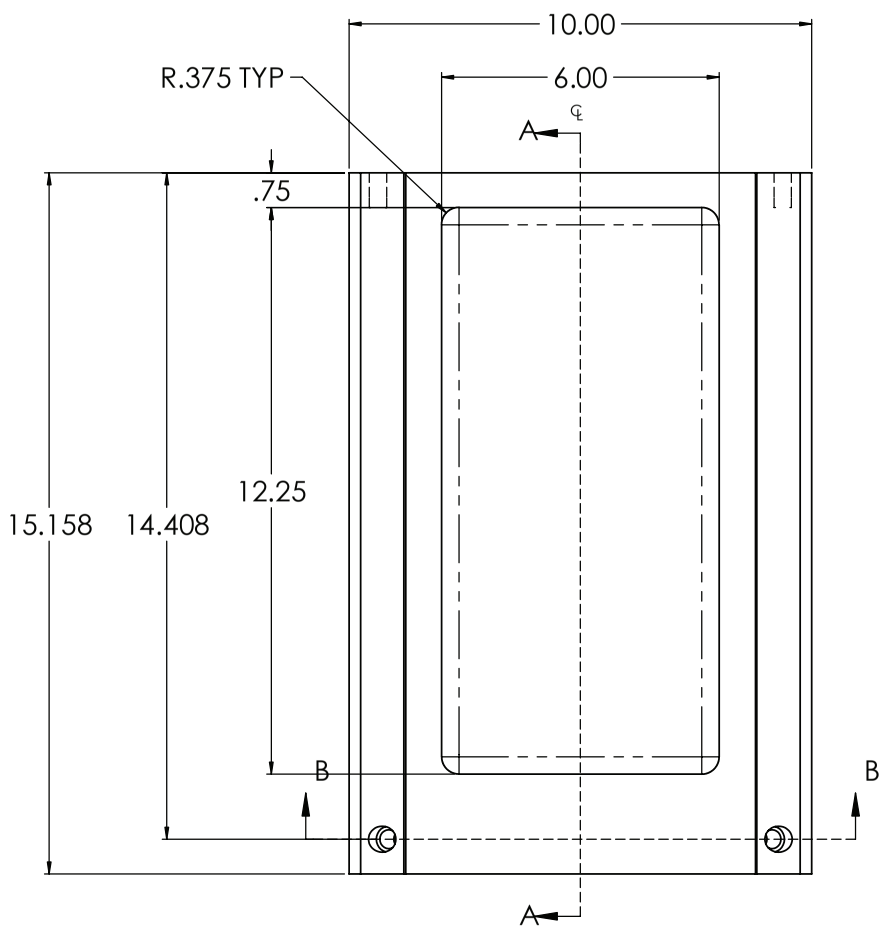

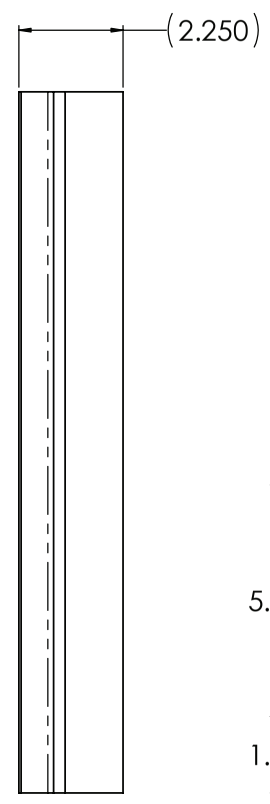

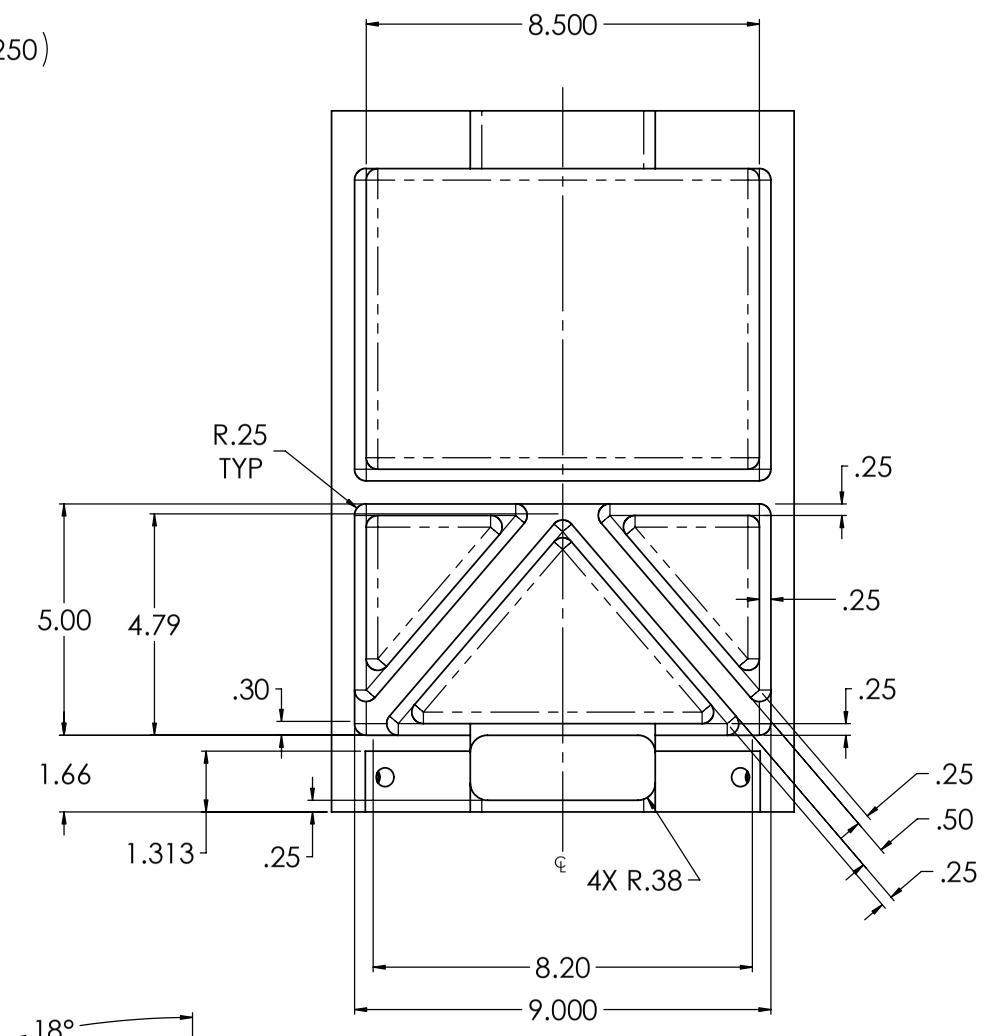

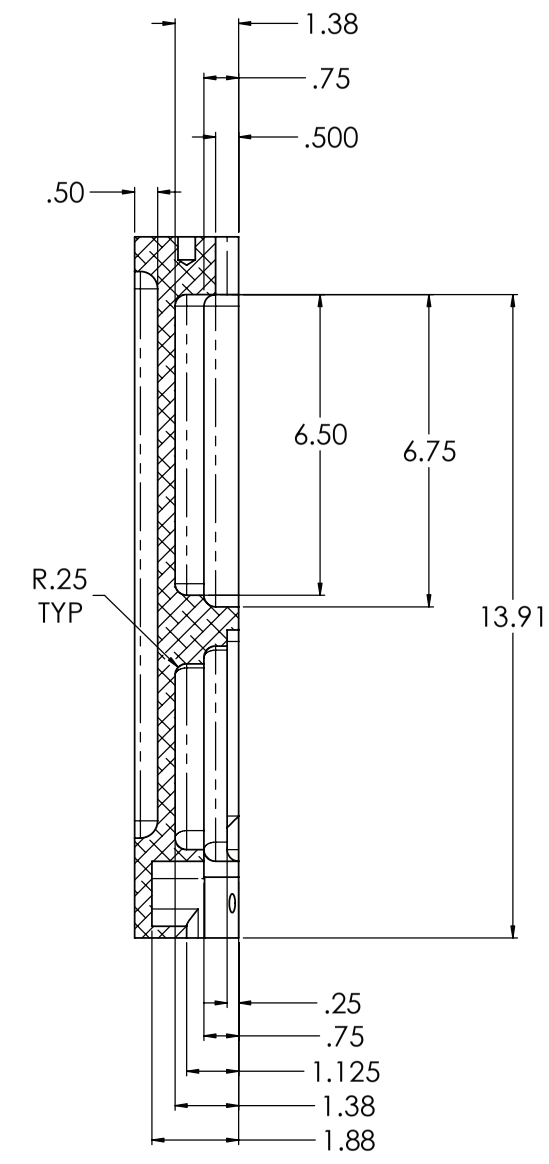

SECTION A-A

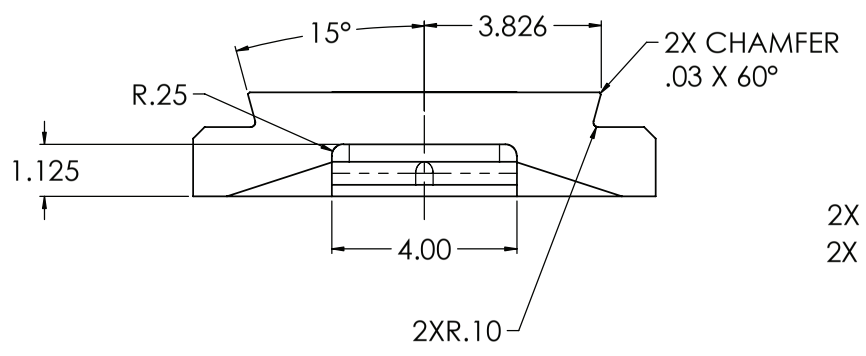

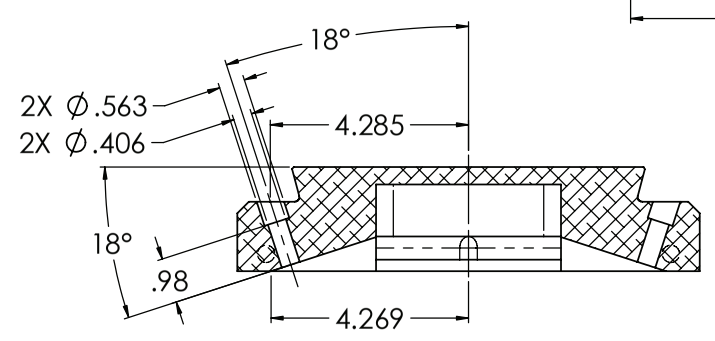

SECTION B-B

NOTES:

1. REMOVE ALL SHARP EDGES.
2. FINISH: BLACK ANODIZE PER MIL-A-8625, TYPE II, CLASS 2

REVISIONS			
REV.	DESCRIPTION	DATE	APPROVED

UNLESS OTHERWISE SPECIFIED TOLERANCES
DECIMAL DIM: XXXX ± .0005, XXX ± .005, XX ± .02
ANGULAR DIM: MACHINED ±0° 30', LOCATING ±0° 30', FORMED ±1°, CHAMFER ±5°
SURFACE FINISH 63
MAX R 0.015
BREAK ALL SHARP EDGES & REMOVE BURRS.

PROPRIETARY AND CONFIDENTIAL
THE INFORMATION CONTAINED IN THIS DRAWING IS THE SOLE PROPERTY OF PLANEWAVE INSTRUMENTS. ANY REPRODUCTION IN PART OR AS A WHOLE WITHOUT THE WRITTEN PERMISSION OF PLANEWAVE INSTRUMENTS IS PROHIBITED.

	NAME	DATE
DRAWN	W. ZHOU	7/15/06
CHECKED		
ENG APPR.		

MATERIAL: 6061-T6 AL ALLOY

FINISH: SEE NOTE

PLANEWAVE Instruments

TITLE: PLATE, DOVETAIL

SIZE: D | DWG. NO.: 200319 | REV.: A

SCALE: 1:2 | CAD FILE: 200319A | SHEET 1 OF 1